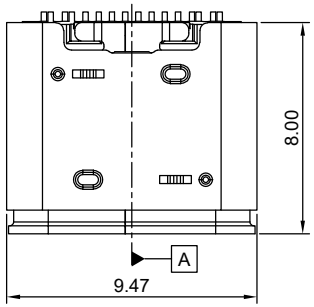

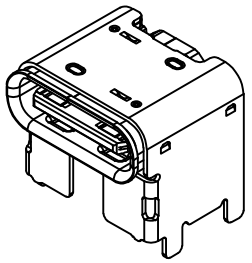

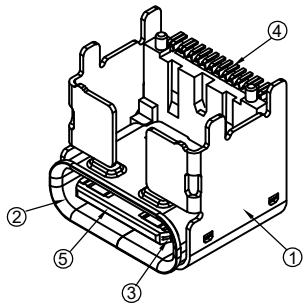

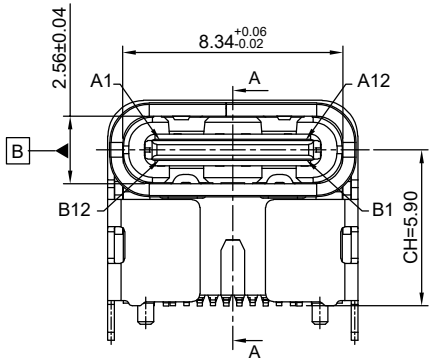

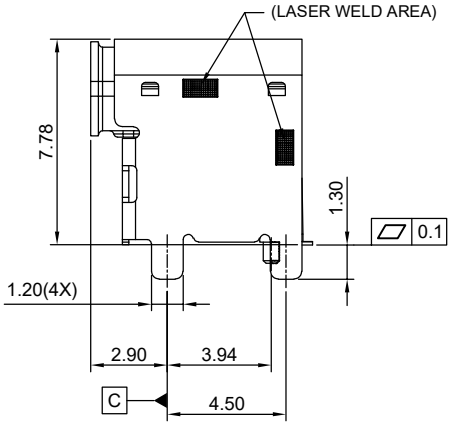

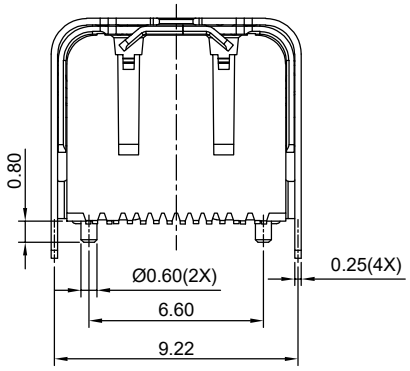

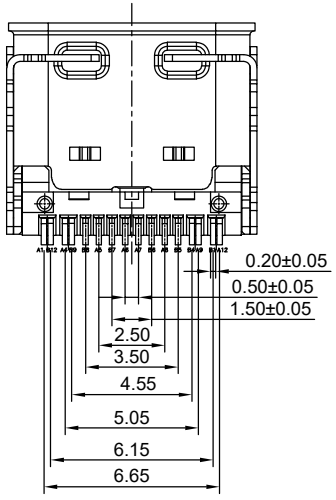

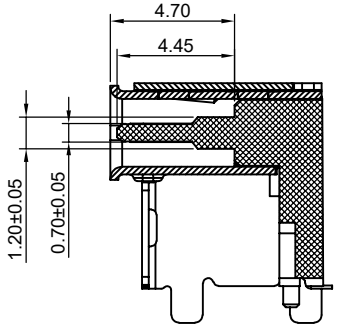

SECTION A-A

PART NUMBER:

WUTC −16 4 2−DS01

- 16:16PIN
- 4:HOUSING LCP
- 2:CONTACT FUNCTIONAL AREA PLATED Au3U"
- DS:90度 SMT

TABLE:

NO	PART	Q'TY	Material
1	INNER SHELL	1	STAINLESS STEEL 304, T=0.30mm,NI 30u" MIN PLATED
2	OUTER SHELL	1	STAINLESS STEEL 304, T=0.25mm,NI 30u" MIN PLATED
3	Mid Plate	1	STAINIESS STEEL 301, T=0.15 NO PLATING
4	CONTACT	16	COPPER ALLOY C18400,T=0.12mm,Au Plated On Vontact Area GF Plated On Solder Area;Nickel 50u"Min Underplating Over All.
5	HOUSING	1	LCP BLACK UL94 V-0

REV.	ECN. NO.	DRAWN	DATE	EC.content
A.0	NEW	Lumiore	07/28/2026	–

ECONN Technology
ECONN CORPORATION

HSF Compliant

⊗:QUALITY CONTROL ITEM	
APPROVED	
CHECKED	
DRAWN	

GENERAL TOLERANCE
.X± 0.35 X.°±2°
.XX± 0.25 .X'±1'
.XXX± 0.15

PART NO.: WUTC−1642−DS01

TITLE: USB TYPE-C RECEPTACLE
16PIN SMT垫高4.3 CH5.9

UNIT: mm | SCALE: | SHEET: 1/2 | REV.: A.0

SIZE: A4

說明: △: 備註 ◇: 版本變更 ⊖: 尺寸序號 ■: 重點尺寸 ▼: CPK尺寸

DOCUMENT NO. : ZER0013/A.3

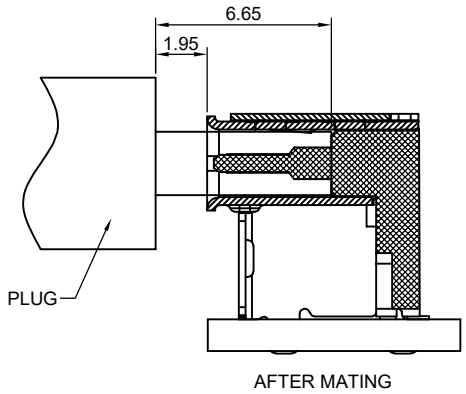

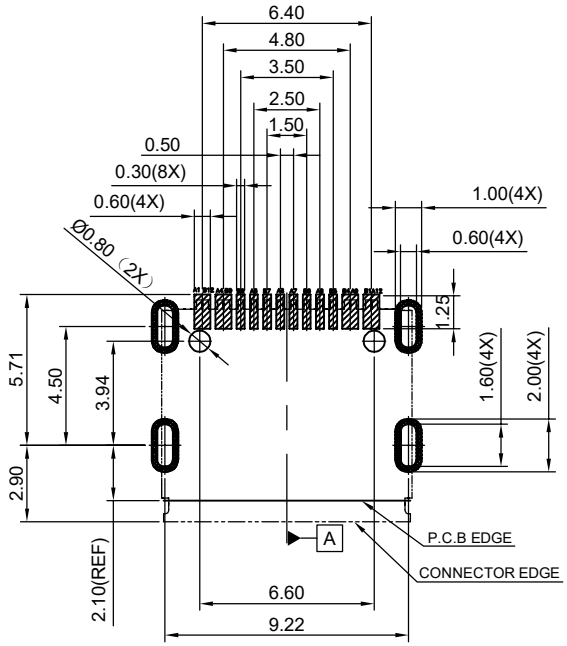

RECOMMEND P.C.B LAYOUT(TOW VIEW)

TOLERANCE FOR PCB LAYOUT IS ±0.05

Specifications:
1.Electrical Performance,
1-1. Current Rating:1.25A FOR VBUS/PIN, 1.375 A FOR GND/PIN, 0.5A FOR VCONN /PIN,0.25A FOR OTHER CONTACT.
1-2. Voltage Rating:20V DC/AC (Rms. Max)
1-3. Contact Resistance: 40mΩ Max Initial.
50mΩ Max After Test
1-4.Dielectric Withstanding Voltage: 100V AC
1-5.Insulation Resistance:100MΩ Min
2.Mechanical Performance,
2-1.Insertion Force: 5~20N.
2-2.Extraction Force: 8~20N.
2-3.Durability: 10000 Cycles.
3.Environmental Performance:
Operating Temperature: -25°C~+85°C.
4.IR Reflow:
The Peak Temperature On The Board Shall Be Maintained For 10 Seconds At 260°C.
5.Salt Spray:48H

USB Type-C Pin Assignments

Pin Number	Signal Name	Pin Number	Signal Name
A1	GND	B12	GND
A2	----	B11	----
A3	----	B10	----
A4	VBUS	B9	VBUS
A5	CC1	B8	SBU2
A6	Dp1	B7	Dn2
A7	Dn1	B6	Dp2
A8	SBU1	B5	CC2
A9	VBUS	B4	VBUS
A10	----	B3	----
A11	----	B2	----
A12	GND	B1	GND

REV.	ECN. NO.	DRAWN	DATE	EC.content
A.0	NEW	Lumiore	07/28/2026	–

ECONN Technology
ECONN CORPORATION

HSF Compliant

⊗:QUALITY CONTROL ITEM	
APPROVED	
CHECKED	
DRAWN	

GENERAL TOLERANCE
.X± 0.35 X.°±2°
.XX± 0.25 .X'±1'
.XXX± 0.15

PART NO.: WUTC-1642-DS01
TITLE: USB TYPE-C RECEPTACLE
16PIN SMT垫高4.3 CH5.9

UNIT: mm | SCALE: | SHEET: 2/2 | REV.: A.0

SIZE: A4

說明: △: 備註 ◇: 版本變更 ⊖: 尺寸序號 ■: 重點尺寸 ▼: CPK尺寸

DOCUMENT NO. : ZER0013/A.3