

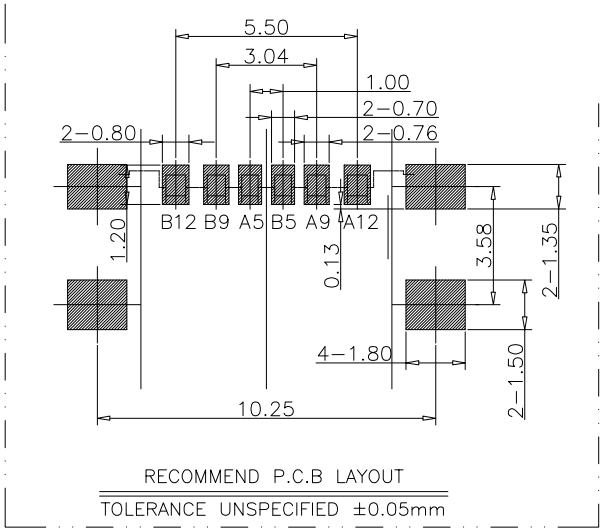

NOTES:

SPECIFICATION:

1. CURRENT RATING: 3.0A MAX
2. VOLTAGE: 100 VAC
3. TEMPERATURE RANGE: -30°C~+85°C
4. CONTACT RESISTANCE: 40 MILLIONHM MAX
5. INSULATION RESISTANCE: 100 MEGOHMS MIN
6. LNSERTION FORCE: 5N~20N
7. UNMATING FORCE: 8N-20N
8. DURABILITY: 10000 CYCLES

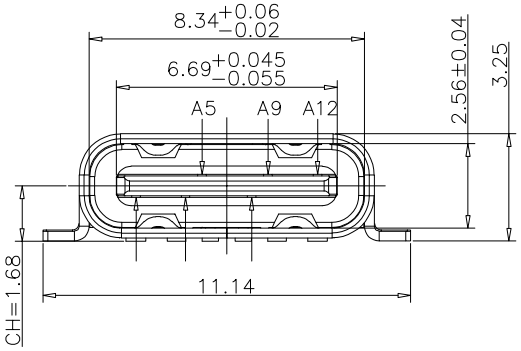

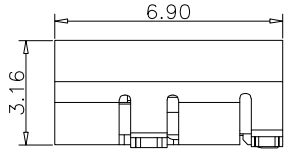

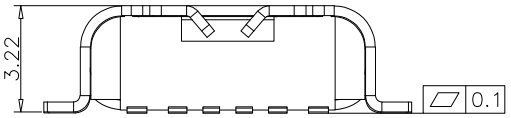

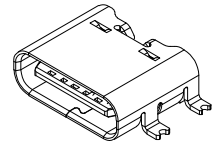

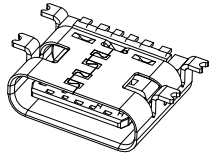

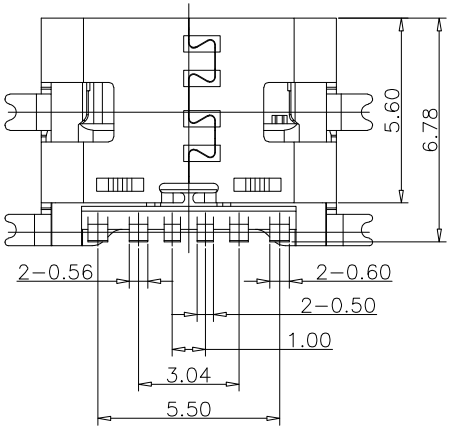

PART NUMBER:WUTC −06 4 3−DS00

- DS:90度 SMT
- 6:CONTACT FUNCTIONAL AREA PLATED Au G/F"
- 4:HOUSING LCP
- 06:6PIN

USB TYPE C PIN ASSIGNMENTS

PIN NUMBER	SIGNAL NAME	PIN NUMBER	SIGNAL NAME
A5	CC1	B12	GND
A9	VBUS	B9	VBUS
A12	GND	B5	CC2

TABLE:

NO	PART	Q'TY	Material
1	SHELL	1	STAINLESS STEEL,NI PLATED
2	CONTACT	6	COPPER STEEL,Au/NI PLATED
3	HOUSING	1	HIGH TEMPERATURE RESISTANT PLASTIC BLACK UL94 V-0

REV.	ECN. NO.	DRAWN	DATE	EC.content
A.0	NEW	LINDA	10/22/2026	–

ECONN Technology
ECONN CORPORATION

HSF Compliant

ⓧ:QUALITY CONTROL ITEM	
APPROVED	
CHECKED	
DRAWN	

GENERAL TOLERANCE
.X± 0.30 X.'± 2'
.XX± 0.20 .X'± 1'
.XXX± 0.10

PART NO.: WUTC−0643−DS00

TITLE: TYPE C 6P单排 SMT

UNIT: mm | SCALE: 1:1 | SHEET: 1/1 | REV.: A.0

SIZE: A4

說明: △: 備註 ◇: 版本變更 Ⓝ: 尺寸序號 ■: 重點尺寸 ▼: CPK尺寸

DOCUMENT NO. : ZER0013/A.3

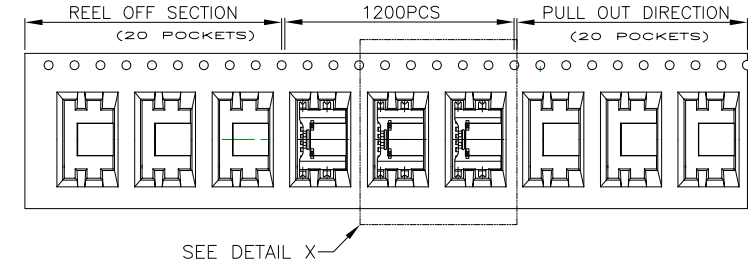

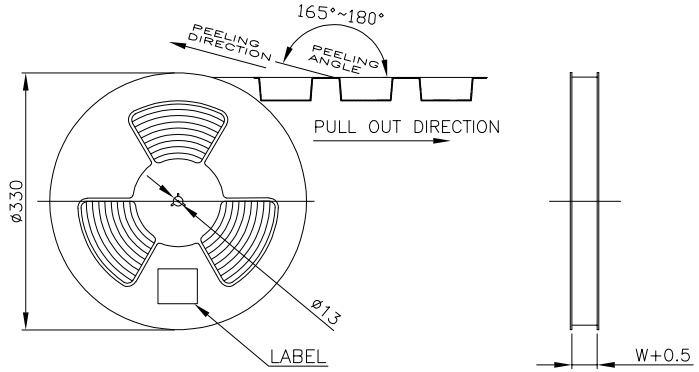

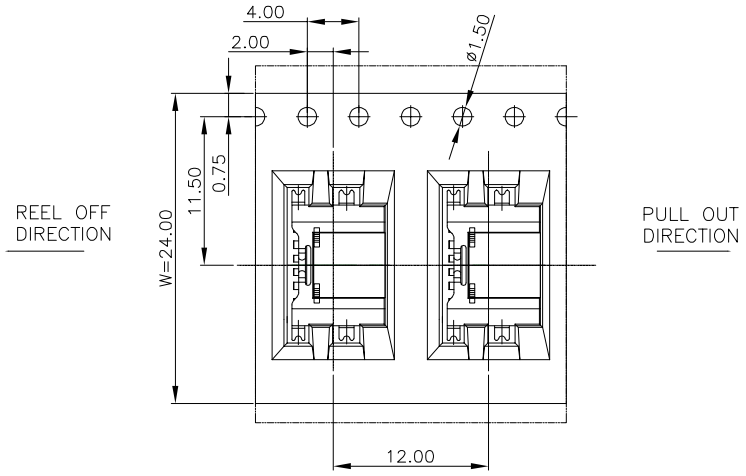

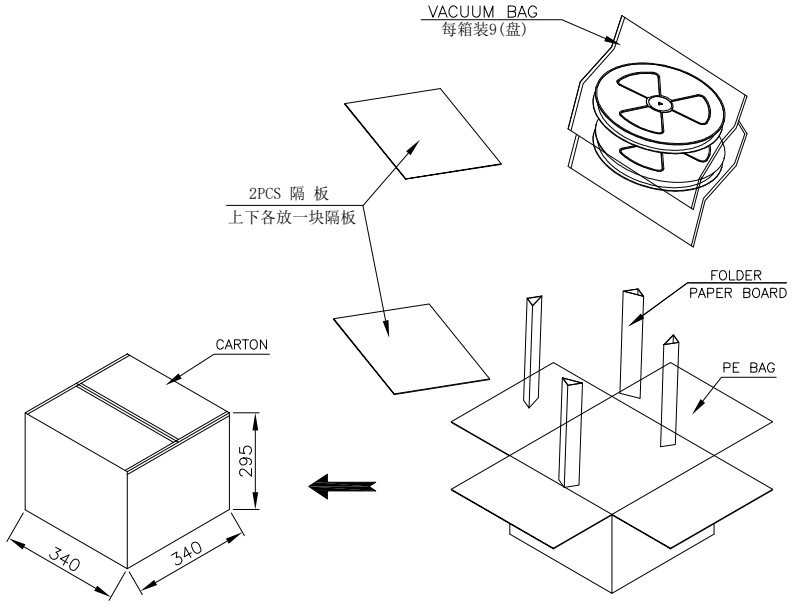

REV.	ECN. NO.	DRAWN	DATE	EC.content
A.0	NEW	LINDA	10/22/2026	–

ECONN Technology
ECONN CORPORATION
HSF Compliant

ⓧ:QUALITY CONTROL ITEM	
APPROVED	
CHECKED	
DRAWN	

GENERAL TOLERANCE
.X± 0.30 X.°± 2°
.XX± 0.20 .X°± 1°
.XXX± 0.10

PART NO.: WUTC-0643-DS00
TITLE: TYPE C 6P单排 SMT

UNIT: mm | SCALE: 1:1 | SHEET: 1/1 | REV.: A.0

SIZE: A4

說明: △: 備註 ◇: 版本變更 Ⓝ: 尺寸序號 ■: 重點尺寸 ▼: CPK尺寸

DOCUMENT NO. : ZER0013/A.3