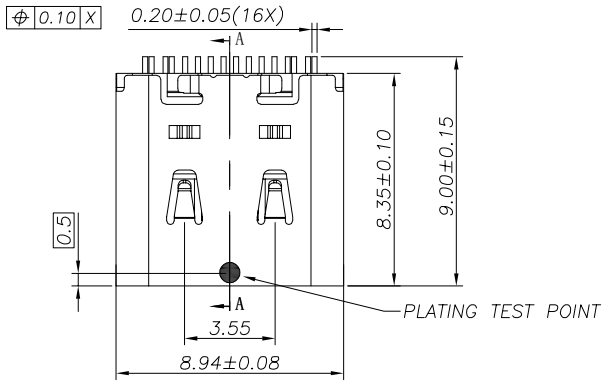

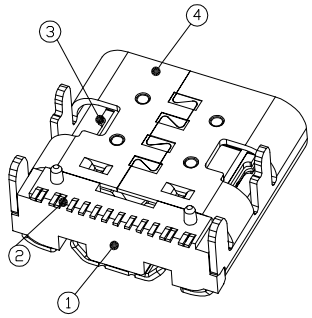

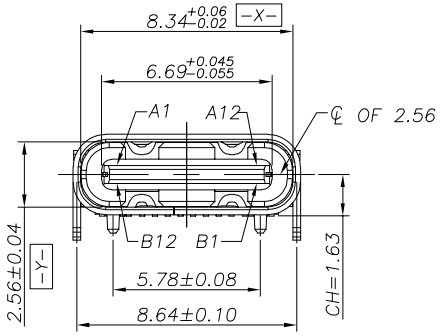

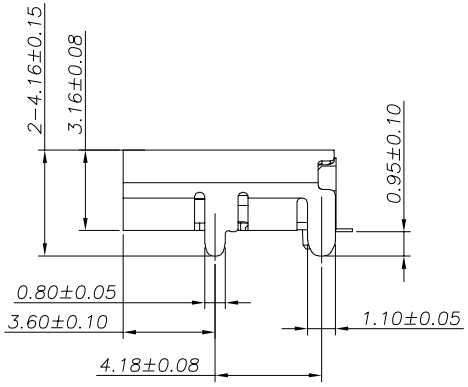

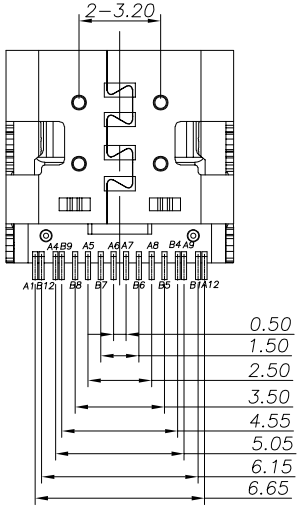

NOTE:
1.MATERIAL SPECIFICATION:
 1.HOUSING:HIGH TEMPERATURE RESISTANT PLASTIC,UL94 V-0.
 2.TERMINAL: COPPER ALLOY(C18150)
 3.MID PLATE: STAINLESS STEEL(SUS301)
 4.FRONT SHELL: STAINLESS STEEL(SUS304)
2.PLATING SPECIFICATION:
 2-1.TERMINAL:
  Ni 50u" MIN. UNDER PLATED OVER ALL.
  Au PLATED ON THE FUNCTIONAL AREA OF CONTACT.
  (GOLD PLATING THICKNESS FOLLOW THE P/N)
  PLATING SPECIFICATIONS OF THE SOLDER AREA FOLLOW THE P/N
 2-2.FRONT SHELL:
  PLATING SPECIFICATIONS FOLLOW THE P/N
 2-3.MID PLATE PLATE:
  CLEAR ONLY
3.MECHANICAL PERFORMANCE,
 3-1.INSERTION FORCE: 0.5~2.0kgf.
 3-2.REMOVAL FORCE: 0.8kgf~2.0kgf.
 3-3.DURABILITY: 10000 CYCLES.
4.ELECTRICAL PERFORMANCE,
 4-1. VOLTAGE RATING: 5V.
  CURRENT RATING: 5A.
 4-2. LLCR:
  VBUS & GND PINS AND OTHER PINS: 40mΩ/PIN MAX.
  LLCR MAX. CHANGE OF ALL PINS: 10mΩ.
 4-3.INSULATION RESISTANCE: 100MΩ MIN
 4-4.DIELECTRIC WITHSTAND VOLTAGE,AC 100V FOR 1 MINUTE.
5. ENVIRONMENTAL PERFORMANCE:
 OPERATING TEMPERATURE: -25°C~+85°C.
6.IR REFLOW:
 THE PEAK TEMPERATURE ON THE BOARD SHALL
 BE MAINTAINED FOR 10 SECONDS AT 260°C.

PART NUMBER:

WUTC -16 E 2-DS04

- DS:90度 SMT
- 2:CONTACT FUNCTIONAL AREA PLATED Au 3U" PLATED ON SOLDER AREA 1U"
- E:HOUSING PA9T(HF)
- 16:16PIN

REV.	ECN. NO.	DRAWN	DATE	EC.content
A.0	NEW	Lumia	08/18/2026	-

ECONN Technology
ECONN CORPORATION
HSF Compliant

ⓧ:QUALITY CONTROL ITEM	
APPROVED	
CHECKED	
DRAWN	

GENERAL TOLERANCE
.X± 0.30 X.°± 2°
.XX± 0.20 .X°± 1°
.XXX± 0.10

PART NO.: WUTC-16E2-DS04
TITLE: USB CF 16PIN (L=8.35) WITH POST

UNIT: mm | SCALE: 1:1 | SHEET: 1/2 | REV.: A.0

SIZE: A4

說明: △:備註 ◇:版本變更 Ⓝ:尺寸序號 ■:重點尺寸 ▼:CPK尺寸

DOCUMENT NO. : ZER0013/A.3

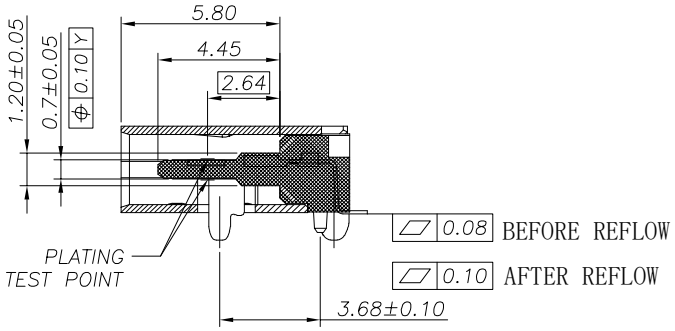

SECTION:A–A

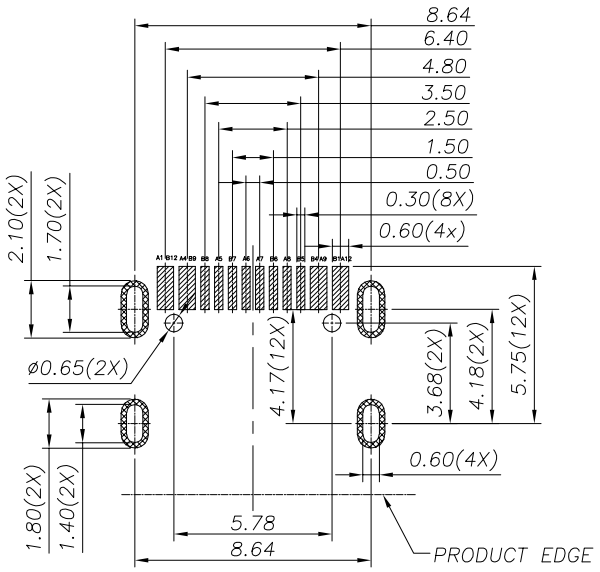

RECOMMENDED PCB LAYOUT(TOP VIEW)

THICKNESS 1.00MM;DEFAULT TOLERANCE:±0.05

USB TYPE–C PIN ASSIGNMENTS

PIN NUMBER	SIGNAL NAME	PIN NUMBER	SIGNAL NAME
A1	GND	B12	GND
A4	VBUS	B9	VBUS
A5	CC1	B8	SBU2
A6	Dp1	B7	Dn2
A7	Dn1	B6	Dp2
A8	SBU1	B5	CC2
A9	VBUS	B4	VBUS
A12	GND	B1	GND

REV.	ECN. NO.	DRAWN	DATE	EC.content
A.0	NEW	Lumia	08/18/2026	–

ECONN Technology
ECONN CORPORATION

HSF Compliant

ⓧ:QUALITY CONTROL ITEM	
APPROVED	
CHECKED	
DRAWN	

GENERAL TOLERANCE
.X± 0.30 X.°± 2°
.XX± 0.20 .X°± 1°
.XXX± 0.10

PART NO.: WUTC–16E2–DS04

TITLE: USB CF 16PIN (L=8.35) WITH POST

UNIT: mm | SCALE: 1:1 | SHEET: 2/2 | REV.: A.0

SIZE: A4

說明: △:備註 ◇:版本變更 Ⓝ:尺寸序號 ■:重點尺寸 ▼:CPK尺寸

DOCUMENT NO. : ZER0013/A.3