

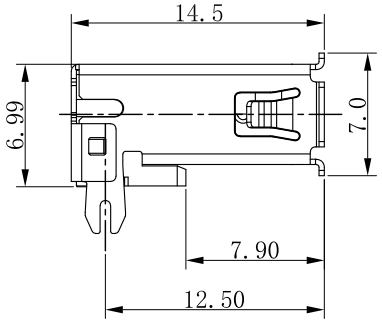

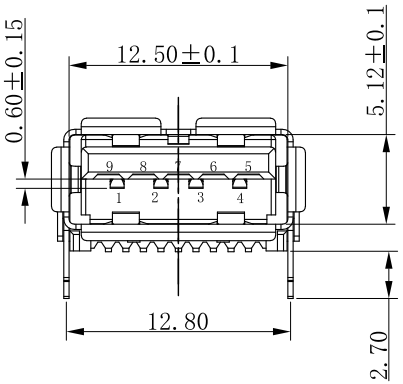

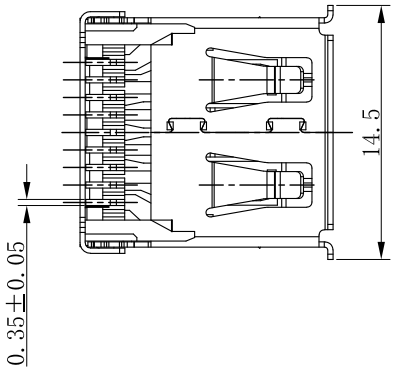

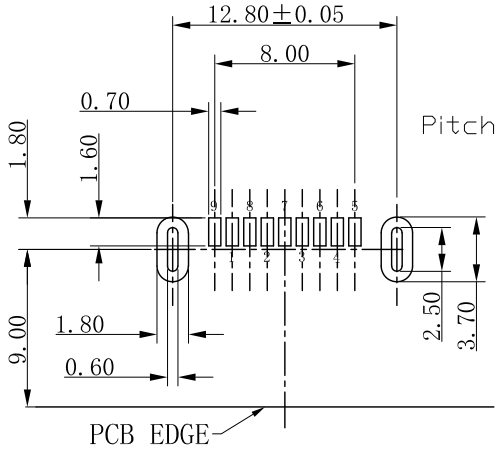

RECOMMENDED PCB LAYOUT

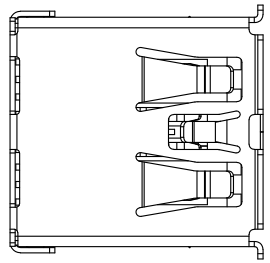

NOTE:
1. MATERIAL:
   1.1 INSULATOR:LCP UL 94V-0
   1.2 CONTACT:BRONZE(T=0.20mm)
   1.3 SHELL:BRASS(T=0.30mm)
2. ELECTRICAL CHARACTERISTICS;
   2.1 CONTACTRESISTANCE:30mΩ MAXIMUM
   2.2 CONTACT CURRENT RATING:1.5A
   2.3 DIELECTRIC WITHSTANDING VOLTAGE:500 V R.M.S.
   2.4 INSULATION RESISTANCE 1000 MEGOHMS MIN
   2.5 OPERATING TEMPEROTURE:-40° C ～ 85° C
3 MECHANICAL CHARACTERISTICS:
   3.1 MATING FORCE:3.57kg MAX
   3.2 UNMATED FORCE:1.02kg MIN AFTER TEST
   3.3 DURABILITY:MANDATORY:1500 CYCLES
4. PLATING
   4.1 TERMINAL:
      50u" MIN NICKEL ALL OVER
      80u"MIN Tin ON SOLDER AREA
      (1~30)u"Au ON CONTACT AREA
   4.2 SHELL:50u"MIN.NICEL ALL OVER

PART NUMBER:

WU30- 4 B 1 3- DS03

- 30 :USB3.0
- 4B-housing LCP BLUE
- 1: 1层
- PLATING CODE 3-GOLD PLATED G/FU"
- DS: 90度SMT

REV.	ECN. NO.	DRAWN	DATE	EC.content
A.0	NEW	Lumiore	14/07/2026	-

ECONN Technology
ECONN CORPORATION

HSF Compliant

Ⓧ:QUALITY CONTROL ITEM	
APPROVED	
CHECKED	
DRAWN	

GENERAL TOLERANCE
.X± 0.38 X.° ±2°
.XX± 0.25 .X° ±1°
.XXX± 0.15

PART NO.: WU30-4B13-DS03
TITLE: USB3.0 AF 短体SMT
塑胶短脚,外壳鱼叉有卷边

UNIT: mm | SCALE: | SHEET: 1/1 | REV.: A.0

SIZE: A4

說明: △: 備註 ◇: 版本變更 Ⓝ: 尺寸序號 ■: 重點尺寸 ▼: CPK尺寸

DOCUMENT NO. : ZER0013/A.3