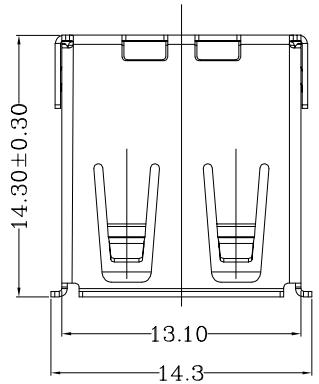

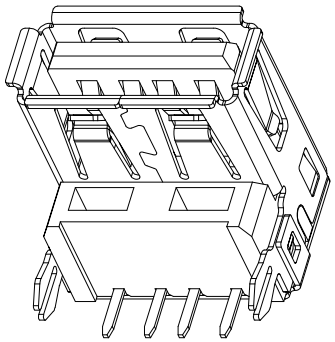

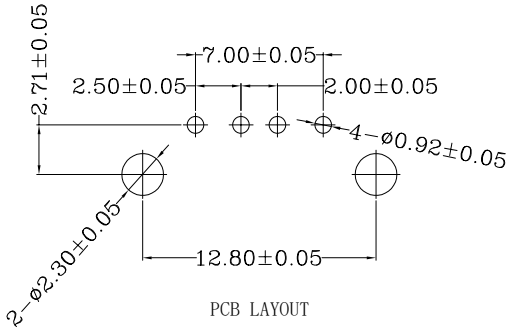

PCB LAYOUT

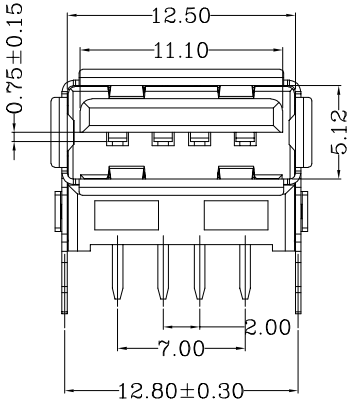

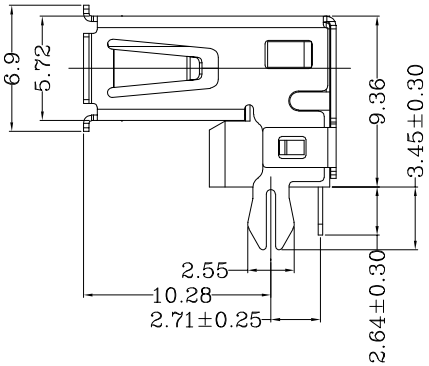

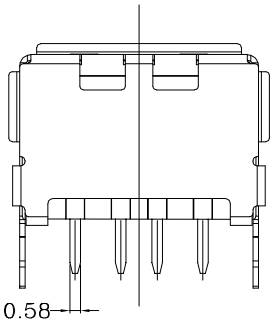

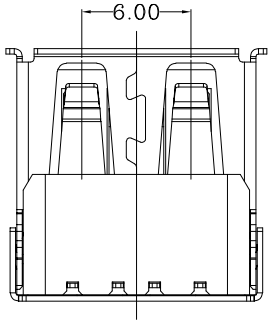

NOTES:
1. MATERIAL SPECIFCATION
1) INSULATION MATERIAL THERMOPLASTIC.
2) SHELL:SPCC
PLATING: NICKEL
3) TERMINAL:COPPER ALLOY
PLATING: GOLD/TIN PLATED.
2. ELECTRICAL CHARACTERISTIC:
1) INSULATION RESISTANCE:1000MΩ MIN.
2) CONTACT RESISTANCE:30mΩ MAX.
3) WITHSTANDING VOLTAGE:500V AC.
3. MECHANICAL CHARACTERISTICS:
1) INSERTION FORCE:3.57Kgf MAX.
2) EXTRACTION FORCE:1.02Kgf MIN.

PART NUMBER:WU20 -1013-DA01

A:有卷边
D:90度 DIP
PLATING CODE
3:GOLD PLATING G/Fu
10:Housing PBT Black
1:1层

REV.	ECN. NO.	DRAWN	DATE	EC.content
A.0	NEW	Candy	07/09/2026	-

ECONN Technology
ECONN CORPORATION
HSF Compliant

ⓧ:QUALITY CONTROL ITEM		GENERAL TOLERANCE .X± 0.38 X.'± 2' .XX± 0.25 .X'± 1' .XXX± 0.15	PART NO.: WU20-1013-DA01		
APPROVED			TITLE: USB AF 90度DIP加高型		
CHECKED					
DRAWN		UNIT: mm	SCALE: 1:1	SHEET: 1/1	REV.: A.0

SIZE: A4

說明: △: 備註 ◇: 版本變更 Ⓝ: 尺寸序號 ■: 重點尺寸 ▼: CPK尺寸

DOCUMENT NO. : ZER0013/A.3